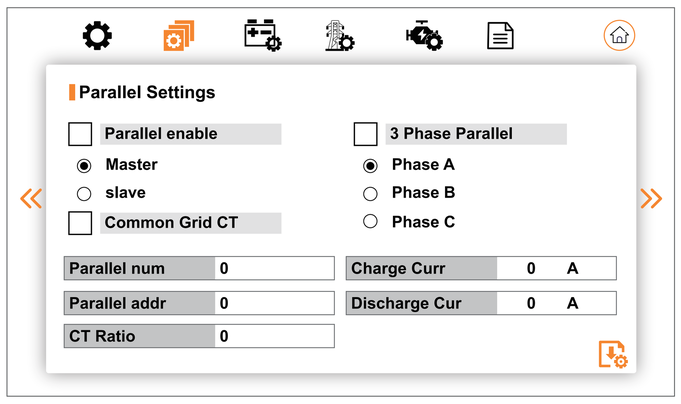

GRID standard:America
GRID Set:120V/240V

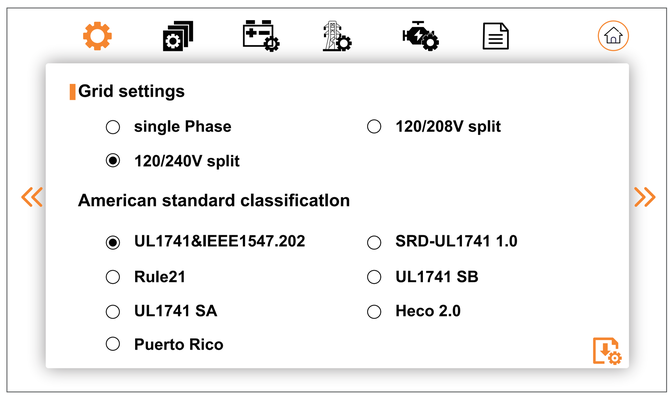

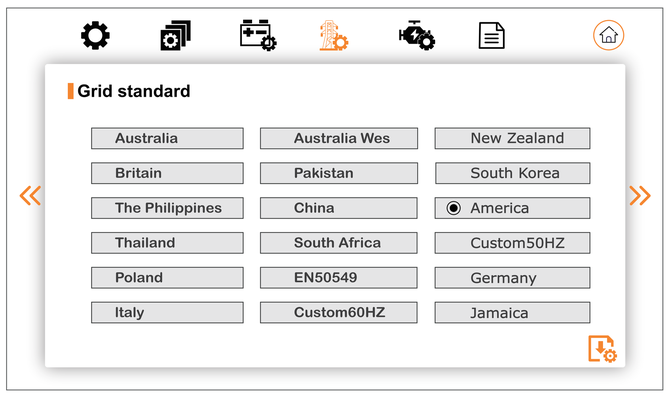

Parallel Set:

Slave 2 Set:
parallel num:3 parallel adr:3
Master/slave:Slave Common CT: Yes
Parallel En:Enable

Slave 1 Set:
parallel num:3 parallel adr:2
Master/slave: Slave Common CT: Yes
Parallel En:Enable

Only this dry port on master inverter need to connect to generator

Master Set:
parallel num:3 parallel adr:1
Master/slave: Master Common CT: Yes
Parallel En:Enable
Charge Curr: xxA Discharge Curr: xxA

GEN Set:
StartS0C:xx% Stop SOC:xx%
Charge Curr:xx A
MAX run time:xxhour
Cooldown:xx hour

Manual Contrl:
GEN En enable Gen charge enable
Auto Start: disable
Manual start :ehable
Connect to Grid:disable

Auto Contrl:
GEN En enable Gen charge enable
Auto Start:enable
Manual start :disable
Connect to Grid:disable
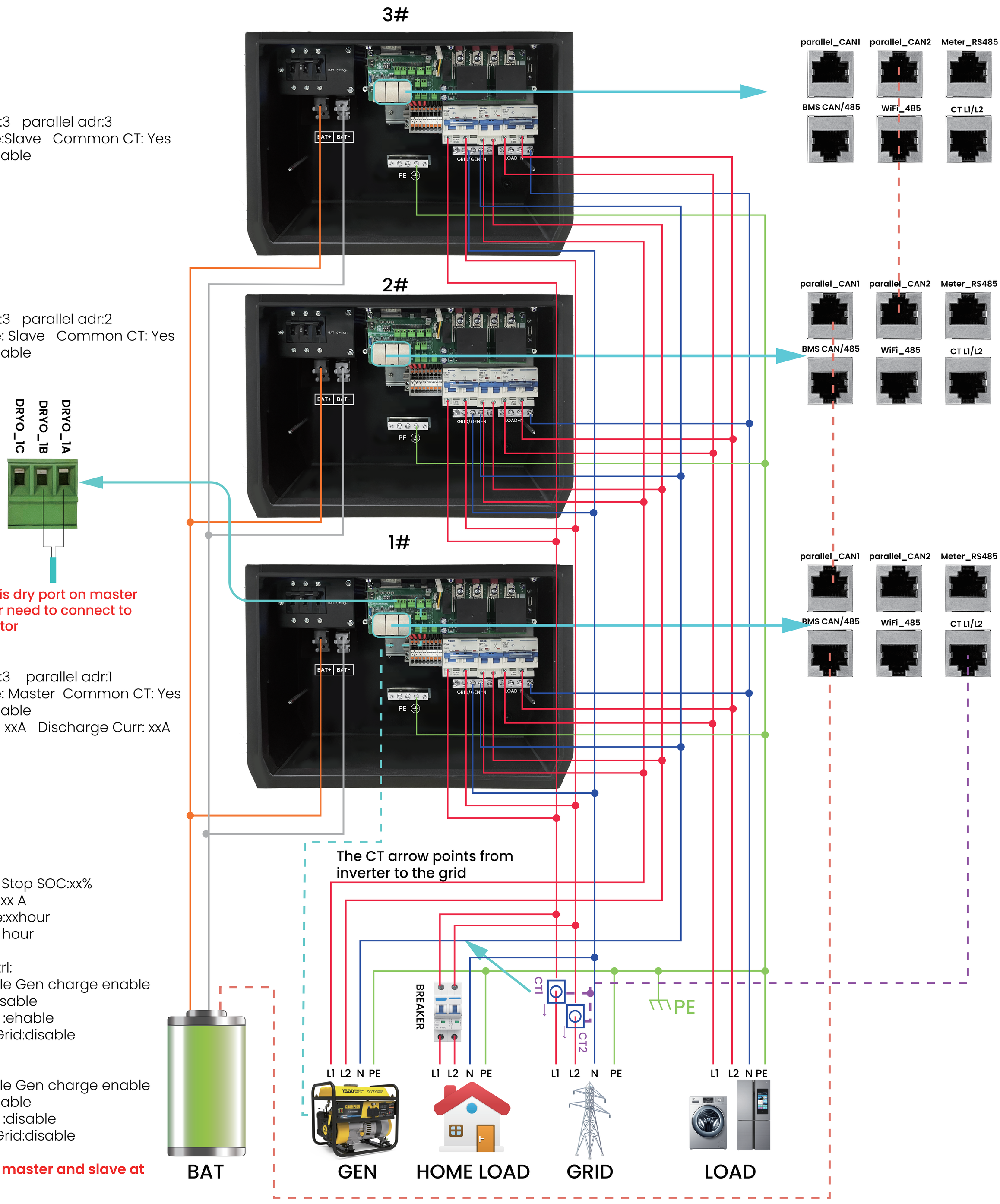
Note:Set the master and slave at same time.